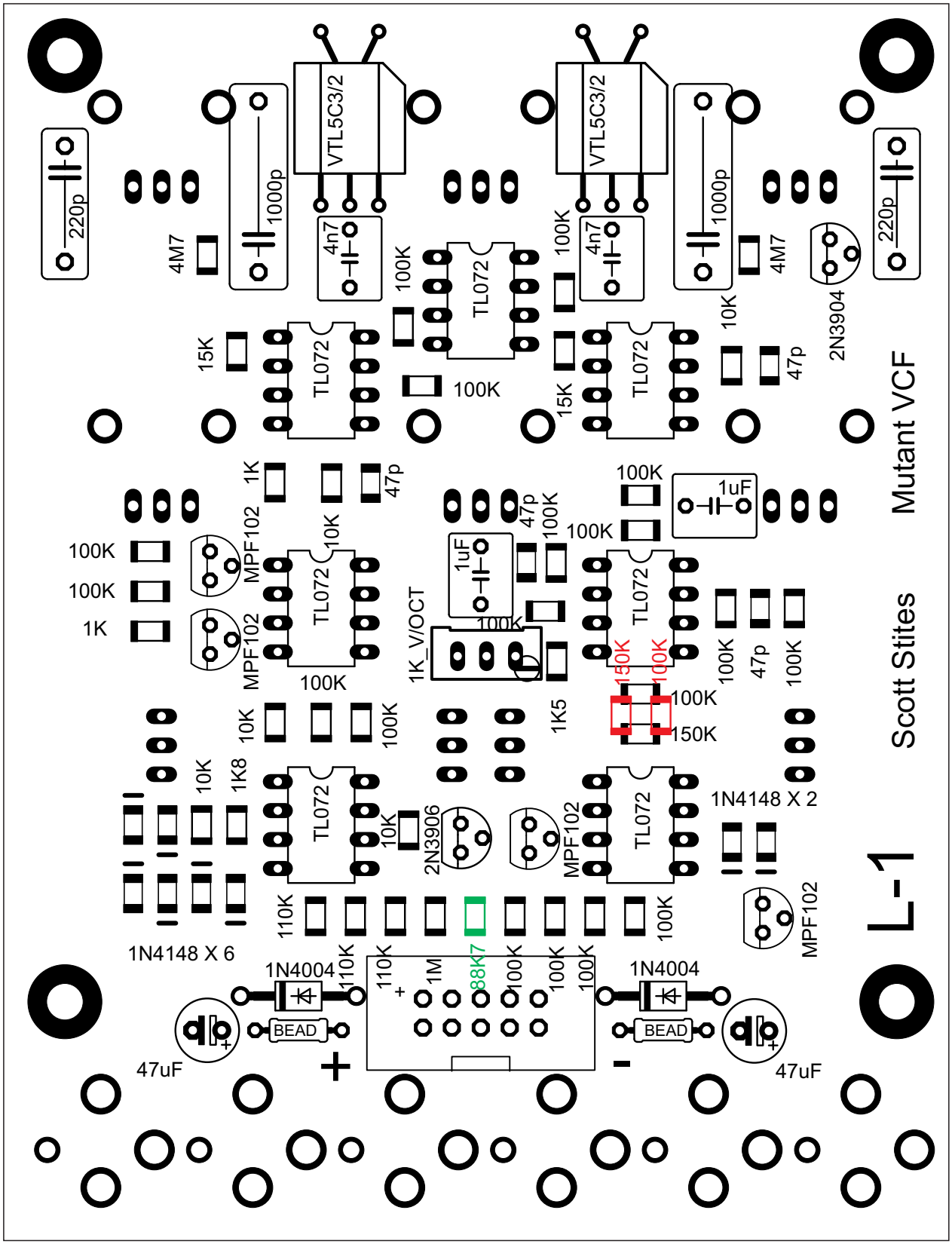

Install resistors as maked red instead of black.
(if you solder SMDs yourself)

Use 110K instead of 88K7 for 15V