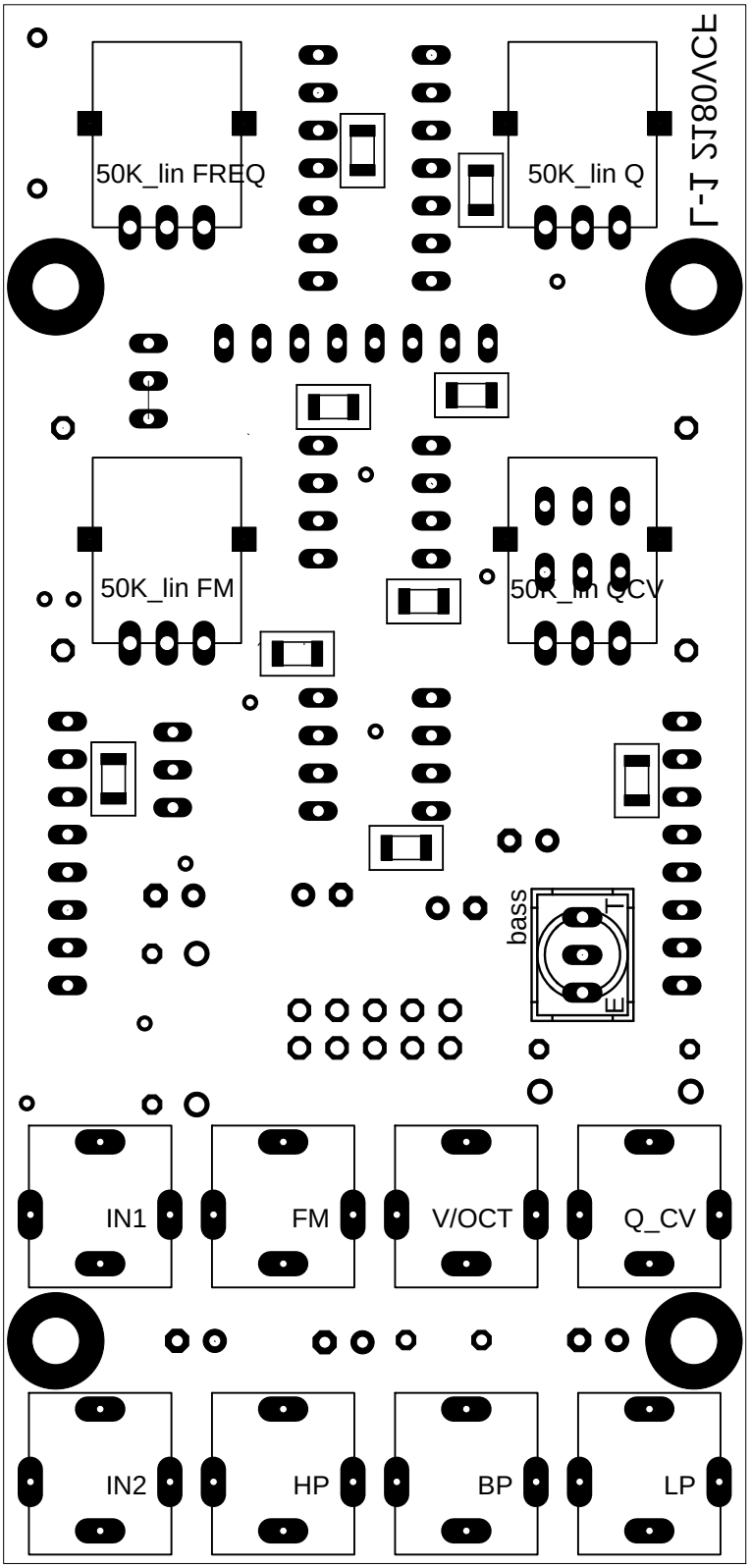
50K_lin FREQ
50K_lin Q
50K_lin FM
50K_lin QCV
bass
T
E
IN1
FM
V/OCT
Q_CV
IN2
HP
BP
LP